Installation Instructions

T & T
Tumbleton and Twist

T&T Tachometer, electronic

diam. 48 mm, Order no. 10036501 | 10036506

Dear Customer,

Congratulations on choosing this excellent T&T instrument. If you do not have adequate knowledge of vehicle electrics, you should have the instrument installed by a professional.

1. Safety instructions
Make sure the battery is disconnected before and during installation of the instrument! The electrical cables can be run through existing wiring looms. However, do not route the cables parallel to ignition cables or other leads supplying large devices. Secure the cables with cable ties or adhesive tape.
Other important things to remember when routing the cables:
- Do not run cables over moving or hot parts
- Protect cables with sheathing
- Provide the cables with additional protection (rubber grommet or something similar) at feed-throughs
- Make sure that cables are not squashed, put under strain or subjected to shearing forces (e.g. check the cables with the handlebar at full left and right lock, and also allow for suspension travel)
- Strip cables with an insulation stripper, taking care not to damage the wire
- Always use a crimping tool for crimp connections
- Always insulate exposed wires (to avoid short-circuits)

After all electrical work, always check the cables and connections again for short-circuits. Short-circuits in the electrical system can cause cable fires, battery explosions and damage to other electrical systems. Incorrect connections can also lead to short-circuits.
Use suitable tools for installing the instrument. Please follow the tool manufacturer's safety instructions.

2. Specifications

Rated voltage:	12 VDC with the battery negative terminal connected to the vehicle chassis
Operating voltage:	10.8 V - 15 V
Power consumption:	150 mA max. not illuminated; approx. 220 mA illuminated
Operating temperature:	-20°C to +85°C
Dimensions:	diam.: 48 mm height: 85 mm complete with cap
Weight:	100 g - 150 g depending on the device
Pulse inputs:	positive or negative pulse input from TTL 5 V (ignition box connection) up to ignition pulse 500 V (connection (-) of an ignition coil)
Illumination:	SMD-LED, internally switched to earth

3. General information
The electronic tachometer is suitable both for positive and negative ignition pulses and also for separate connection to the ignition electronics. The ratio can be switched, which means that the tachometer can be installed on any motorcycle with a 12 V electrical system with the battery negative terminal connected to the motorcycle chassis.
The input signal can be taken from
- the ignition coil (negative terminal of ignition coil = terminal 1)

or
- the ignition electronics (ignition box with separate tachometer connection).

Depending on the model, the instrument can be installed either on the handlebar or in an instrument panel. Handlebar-mounted instruments should preferably be secured with vibration damping. For in-dash instruments, a cut-out with a diameter of 48.5 + 0.5 mm is required in the instrument panel.

4. Description of the instrument
Two different connection options mean that the electronic tachometer is compatible with both positive (e.g. transistorised ignition systems) and negative (e.g. CDI ignition systems) input pulses.

Various ratios can be set, depending on the number of pulses which your motorcycle delivers per engine revolution:
- i = 1:2 (1 pulse per 2 engine revs) – e.g. Harley-Davidson single-fire
- i = 1:1 (1 pulse per 1 engine rev) – the most common ratio
- i = 2:1 (2 pulses per 1 engine rev) – few, sometimes older models
- i = 3:1 (3 pulses per 1 engine rev)

The applicable ratio is set with the two DIP switches located on the base of the housing.

Switch position

Ratio	1 ON	OFF	2 ON	OFF
i = 1:2		▭		▭
i = 1:1	▭			▭
i = 2:1		▭	▭	
i = 3:1	▭		▭	

Factory setting is i = 1:1.

5. Electrical connection:
Important: Before doing any work on your motorcycle's electrical system, make sure that the ignition is off and the battery disconnected. (Danger of short-circuit). Please follow the safety instructions given under section 1 above.

Connect the instrument as shown in the schematic diagram below:
- Connector no. 1/orange cable – illumination +12 V
- Connector no. 2/red cable – vehicle voltage +12 V (switched positive)
- Connector no. 3/black cable – vehicle earth

The two remaining connectors nos. 4 - 5/cables are the pulse inputs. Only one of these two connections is used:
- Connector no. 4/green cable for positive input pulses (transistorised ignition) or
- Connector no. 5/white cable for negative input pulses (CDI ignition)

The unused connector number remains unassigned and the unused cable must be insulated/capped!

If you have any questions about the product or these instructions, please contact our Technical Centre by fax on 00 49 (0)40 734 193-58 or by e-mail at: technikcenter@louis.de before you install or use the product. We will then be able to resolve your questions quickly. This is the best way to ensure that your product is installed properly and used correctly.

Exclusive distributor:
Detlev Louis Motorrad-Vertriebsgesellschaft mbH • Rungedamm 35 • 21035 Hamburg • Germany • Tel.: 00 49 (0)40-734 193 60 • www.louis.eu • technikcenter@louis.de
Detlev Louis AG • Im Schwanen 5 • 8304 Wallisellen • Switzerland • Tel.: (0041) 044 832 56 10 • info@louis-moto.ch

Made in Germany

1706

Installation Instructions

T & T
Tumbleton and Twist

T&T Tachometer, electronic

diam. 48 mm, Order no. 10036501 | 10036506

Schematic diagram

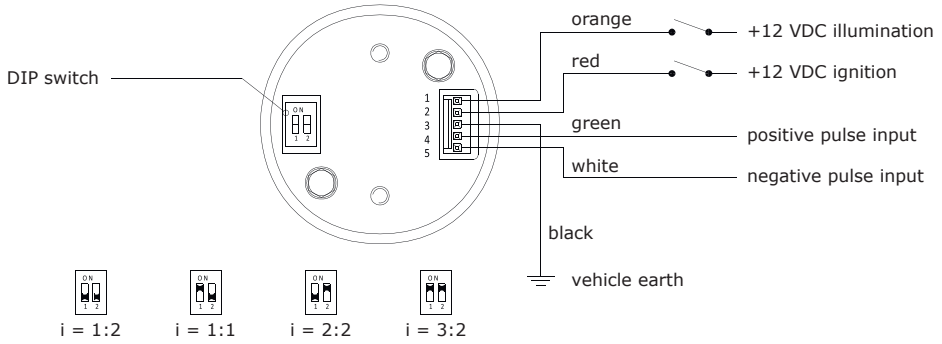

If you‘re not sure whether the ignition delivers positive or negative pulses, please proceed as follows:

- Leave the DIP switch at i = 1:1 (factory setting)
- If the vehicle has ignition electronics (ignition box with separate tachometer connection), then connector no. 4/green cable should be connected to it (also applies to CDI ignitions)
- Otherwise connector no. 4/green cable should be connected to an ignition coil (negative terminal = terminal 1)
- Now connect the battery. If you then switch on the ignition, the tachometer will perform a functional check (full deflection of tachometer needle)
- Now start the engine (idle speed is sufficient)
- After starting, the needle must move, i.e. it must indicate an engine speed. If it does, you should now insulate/cap the white cable (and leave connector 5 unused) and continue with section 5 „Setting the instrument“
- If the needle does not move after starting the engine, you need to switch the engine off again and also disconnect the battery again
- Disconnect connector no. 4/green cable and use connector no. 5/white cable instead. insulate/cap the green cable (and leave connector 4 unused)
- Reconnect the battery before starting the motorcycle

6. Setting the instrument
After connecting the battery and starting the engine, the needle must move.
Please estimate the displayed idle speed. If the indicated speed is correct, you can retain the factory ratio.

If the tachometer does not indicate the correct idle speed, the ratio must be changed. This must be done with the ignition off!

- If the tachometer shows half the correct speed – set the DIP switch to i = 1:2
- If the tachometer shows double the correct speed – set the DIP switch to i = 2:1
- If the tachometer shows three times the correct speed – set the DIP switch to i = 3:1

Finally, fit all the parts again and install the instrument permanently.

7. Disposal of old instrument
Instruments that are no longer serviceable should be disposed of at an authorised recycling centre.

8. Disclaimer
Our instruments are manufactured with great care and they conform to the applicable DIN standards. The instrument must not be opened. We do not accept any liability for damage caused by improper use or incorrect installation. Bulbs are wearing parts and are not covered by the warranty.

If you have any questions about the product or these instructions, please contact our Technical Centre by fax on 00 49 (0)40 734 193-58 or by e-mail at: technikcenter@louis.de before you install or use the product. We will then be able to resolve your questions quickly. This is the best way to ensure that your product is installed properly and used correctly.

Exclusive distributor:
Detlev Louis Motorrad-Vertriebsgesellschaft mbH • Rungedamm 35 • 21035 Hamburg • Germany • Tel.: 00 49 (0)40-734 193 60 • www.louis.eu • technikcenter@louis.de
Detlev Louis AG • Im Schwanen 5 • 8304 Wallisellen • Switzerland • Tel.: (0041) 044 832 56 10 • info@louis-moto.ch

Made in Germany

1706