# Fitting Instruction

Part-No. : **100D042T**
Product : **Steering damper**
Vehicle manufacturer : **Ducati**
Model (Type) : **848 (H6) 2008 →**

Mounted steering damper

**Parts list:**

| | | | |
|---|---|---|---|
| 1 steering damper, 70mm stroke | → „A“ | 1 spacer Ø14 x 2.9 x 16 | → „G“ |
| 1 body clamp Ø22,3mm | → „B“ | 2 sleeve nuts M6 x 15 | → „H“ |
| 1 frame bracket, type D42 | → „C“ | 2 bolts M5 x 16 | |
| 1 slider-tube clamp, Ø53mm | → „D“ | 2 bolts M6 x 16 | |
| 1 stainless chamfered bush, Ø15 x 6 | → „E“ | 1 bolt M8 x 30 | |
| 1 O-Ring, 12x3mm | → „F“ | 1 bolt M8 x 40 | |

**Check for completeness**

**Important!** If you are not a trained motorcycle mechanic stop now. Ask a local motorcycle shop to do the work for you.
Please make sure that the steering damper is not used as a steering stop! Check all bolted connections at last and start with lowest damping for first ride!
If not otherwise mentioned, the following tightening torqueses are recommended: M5 = 5Nm/3.7lbf ft, M6 = 10Nm/7.4lbf ft, M8 = 20Nm/14.8lbf ft

**Position of the body clamp**

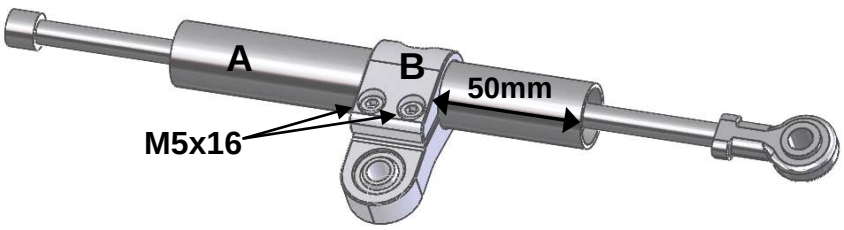


1. Fix body clamp (B) on the steering damper (A) as shown. Follow the fitting instruction that is attached to the body clamp (B).

**Fitting the frame bracket**

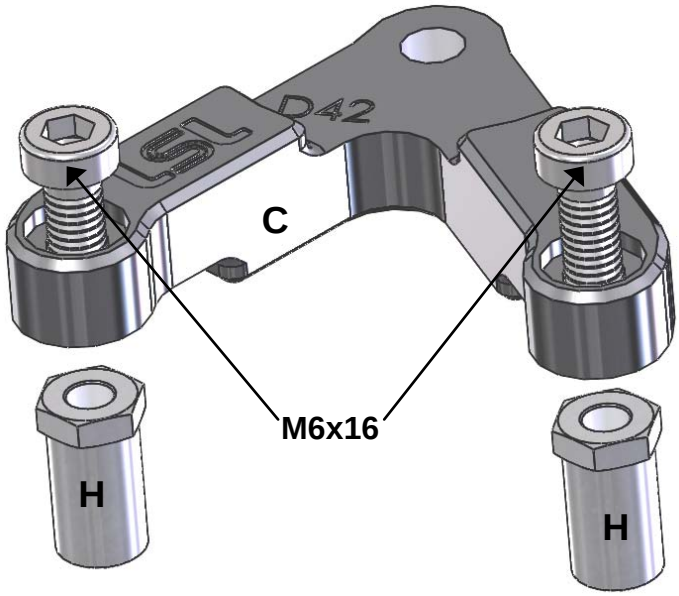


2. Swap original sleeve nuts from the ignition lock cover for the attached sleeve nuts (H). Mount frame bracket (C) with bolts M6x16 on these sleeve nuts (H).

**Fitting the slider tube clamp**

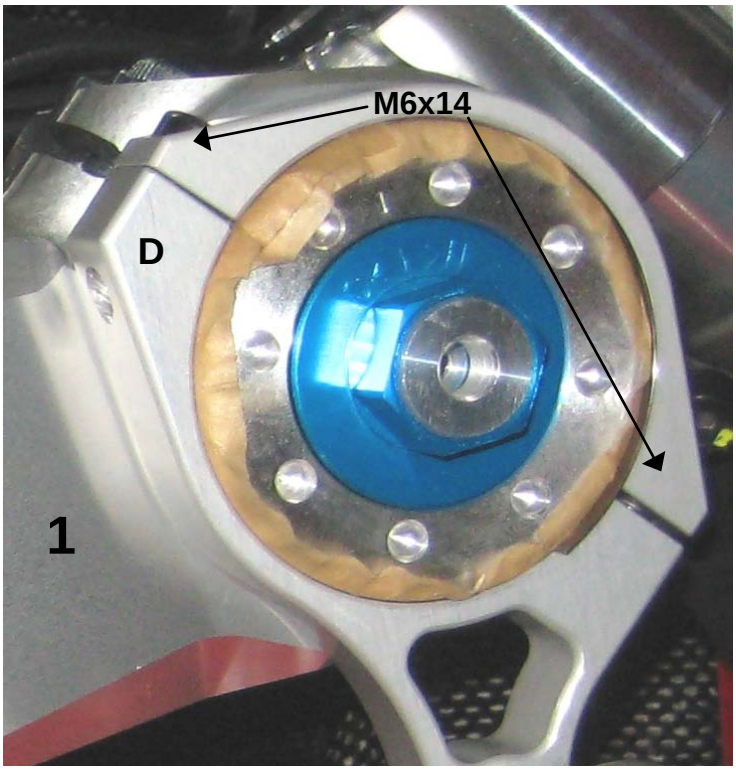


3. Fix the clamp (D) with bolts M6x14 on the slider tube, flush mounted above top yoke (1). Adjust it as shown but do not tighten it too strong, so it may be necessary to adjust the damper by turning the clamp slightly.

**Fitting the steering damper**

**Fixing the body clamp**

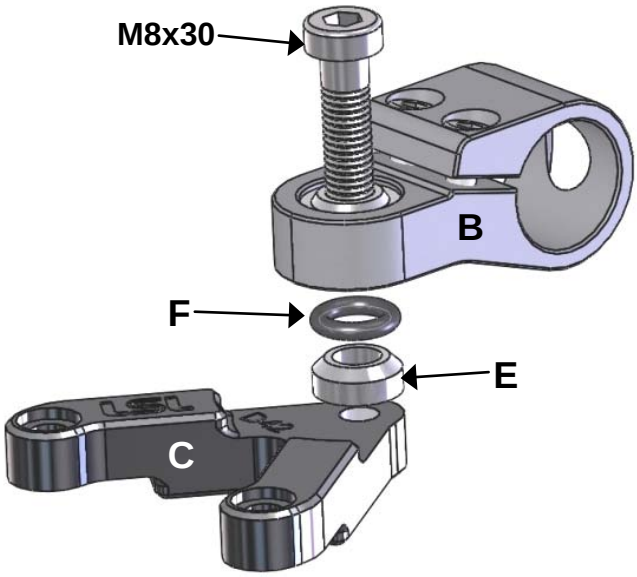


4. Fit the body clamp (B) first with bolt M8x30, stainless chamfered bush (E) and O-Ring (F) on the frame bracket (C) as shown.

**Fixing the damper rod**

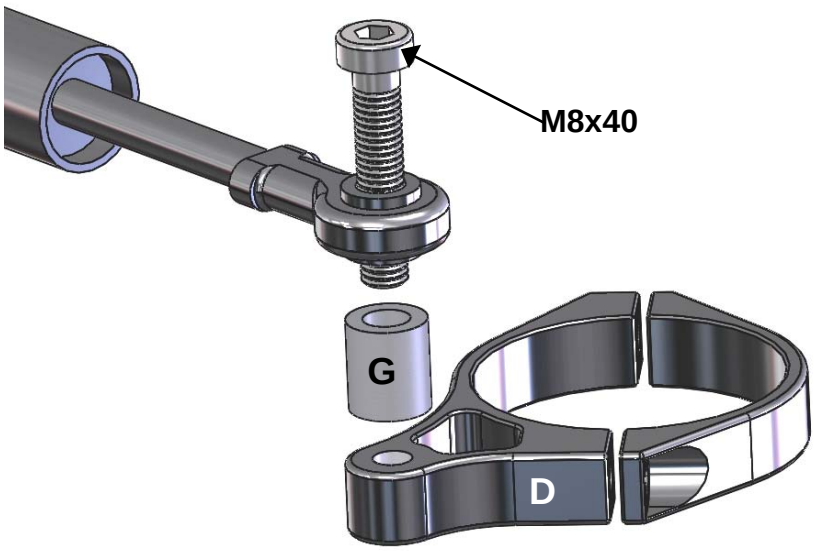


5. Then mount the damper rod with bolt M8x40 and spacer (G) on top of the slider tube clamp (D) as shown. Adjust the damper by turning the clamp.

   **Please make sure that the steering damper is not used as a steering stop! Check all bolted connections at last and start with lowest damping for first ride!**

**LSL-Motorradtechnik GmbH • D-47809 Krefeld**

**www.lsl.eu**