www.puig.tv
www.puigusa.com
info@puig.tv
info@puigusa.com

YAMAHA TENERÉ 700 '19-

M O U N T I N G I N S T R U C T I O N S

REF 3732 — MANUAL REGULATION SYSTEM FOR WINDSHIELDS

1 Person

15 min

EASY

ALLEN

Nº 2,5
Nº 3
Nº 4
Nº 5

ID	PIEZA/PART	DESCRIPCIÓN	DESCRIPTION	QTY	REF
1		Varillas	Rods	2	VARILL-MEM--722
2		Soporte superior	Upper support	2	SOPOR12P9-U3732
3		Soporte inferior	Lower support	2	SOPOR12P9-L3732
4		Soporte cúpula	Screen support	2	SOPOR12P9 -S3732
5		Soporte palanca	Lever support	2	SOPOR12P9- P3732
6		Soporte palanca-cupula	Screen-lever support	2	SOPOR12P9PC3732
7		Casquillo superior (washer A)	Upper bush (washer A)	2	CASQUI------851
8		Casquillo inferior (washer B)	Lower bush (washer B)	2	CASQUI------852
9		Casquillo Ø4,3x Ø8 x2,5 (washer C)	Ø4,3x Ø8 x2,5 spacer (washer C)	2	CASQUI------3732
10		Remache Ø4x10mm (Negro)	Ø4x10mm Blind Rivet (Black)	2	REMACHE-4X10---
11		Tornillo Allen M4x12 ISO7380	M4x12 ISO7380 Allen screw	2	TORNI-I7380-800
12		Tornillo Allen M4x10 ISO7380	M4x10 ISO7380 Allen screw	4	TORNI-I7380-645
13		Tuerca M4 autoblocante	M4 nut	2	TUERCAE985-0290
14		Tapón tuerca M4	M4 nut cap	2	TAPON--------91
15		Arandela Grower M4 DIN127/B	M4 DIN127/B Grower washer	4	ARAND-------854
16		Tornillo Allen M5x11 Ø11 ISO 7380	M5x11 Ø11 ISO 7380 Allen screw	4	TORNI-AI----520
17		Arandela de nylon M5x1	M5x1 nylon washer	4	ARNV0000000245
18		Arandela de goma Ø4,5 x Ø11 x 2mm	Ø4,5 x Ø11 x 2mm rubber washer	4	ARAND-EPDM--722
19		Casquillo Ø6,5x Ø13 x8,5	Ø6,5x Ø13 x8,5 spacer	2	CASQUI-----0298
20		Tornillo Allen M6x25 Ø14 ISO7380	M6x25 Ø14 ISO7380 Allen screw	2	TORNI-I7380-405

Illustrations and layout by: www.ciandisseny.com

YAMAHA TENERÉ 700 '19-

INSTRUCCIONES DE MONTAJE - MOUNTING INSTRUCTIONS - MONTAGEANLEITUNG

1

DISASSEMBLY
DESMONTAJE

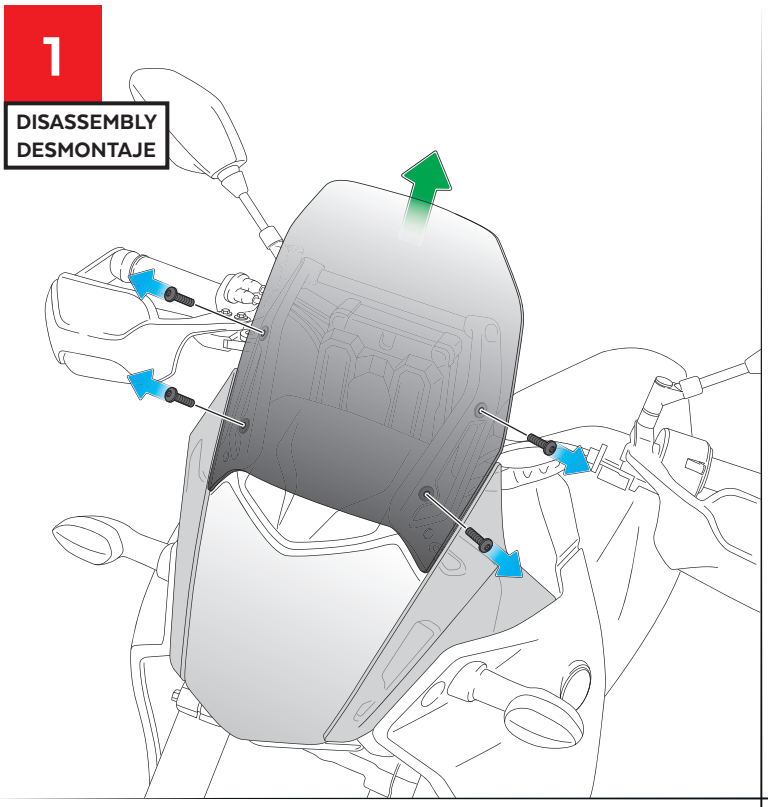

2

DISASSEMBLY
DESMONTAJE

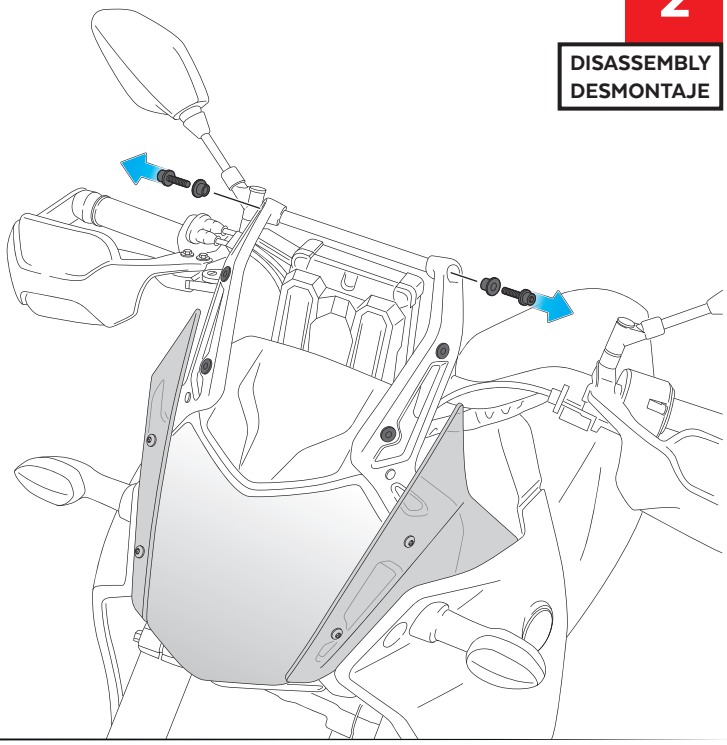

3

ASSEMBLY
MONTAJE

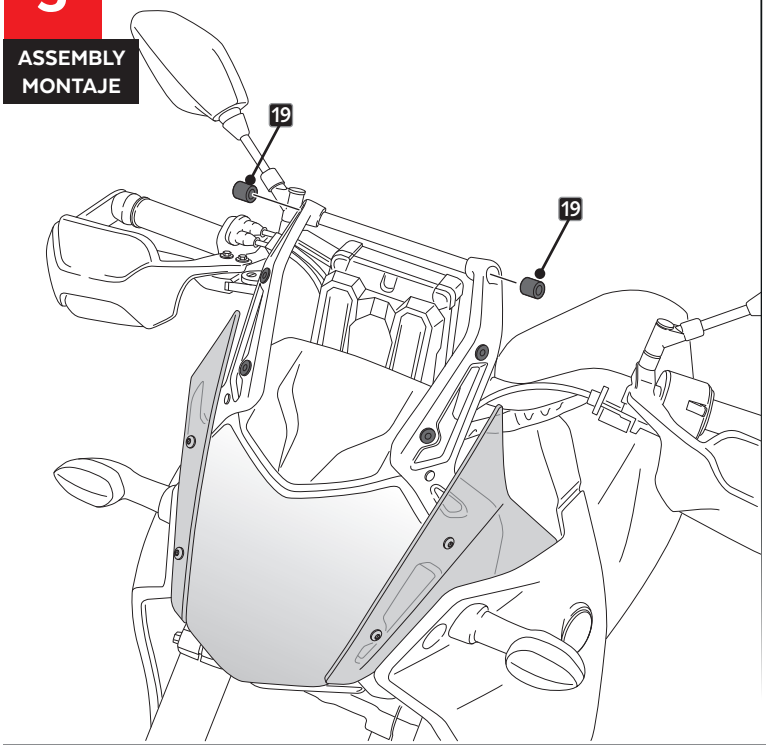

4

ASSEMBLY
MONTAJE

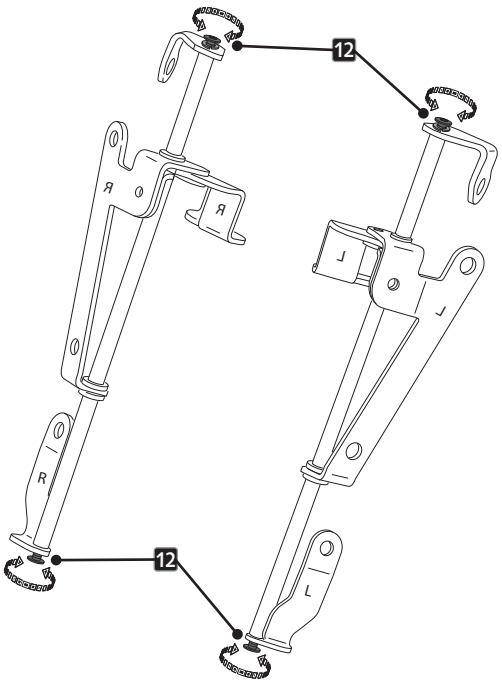

ID-12 AFLOJAR LOS TORNILLOS
LOOSEN SCREWS

Illustrations and layout by: www.ciandisseny.com

YAMAHA TENERÉ 700 '19-

INSTRUCCIONES DE MONTAJE - MOUNTING INSTRUCTIONS - MONTAGEANLEITUNG

5
ASSEMBLY
MONTAJE

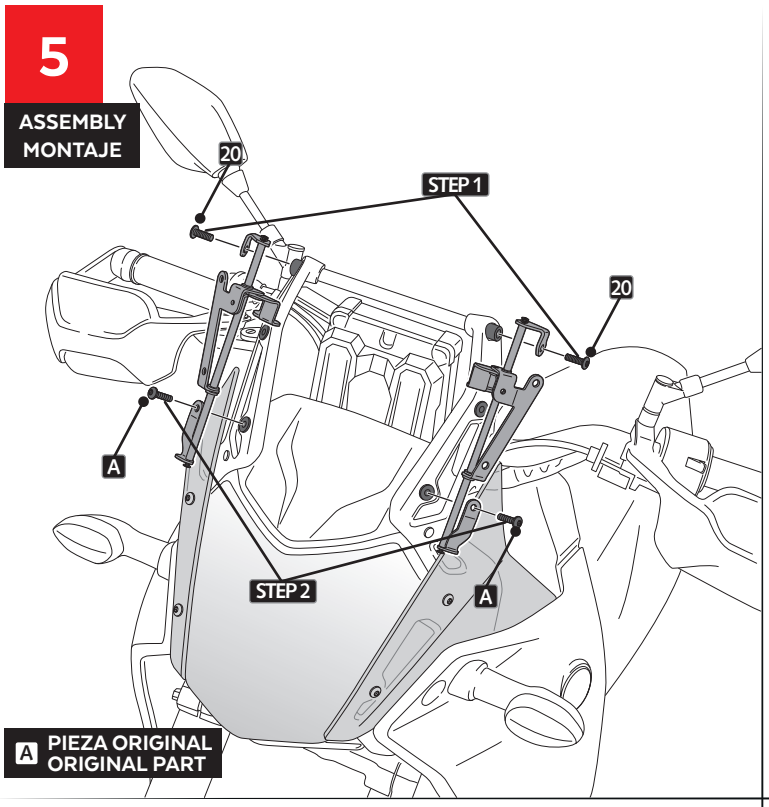

A PIEZA ORIGINAL
ORIGINAL PART

6
ASSEMBLY
MONTAJE

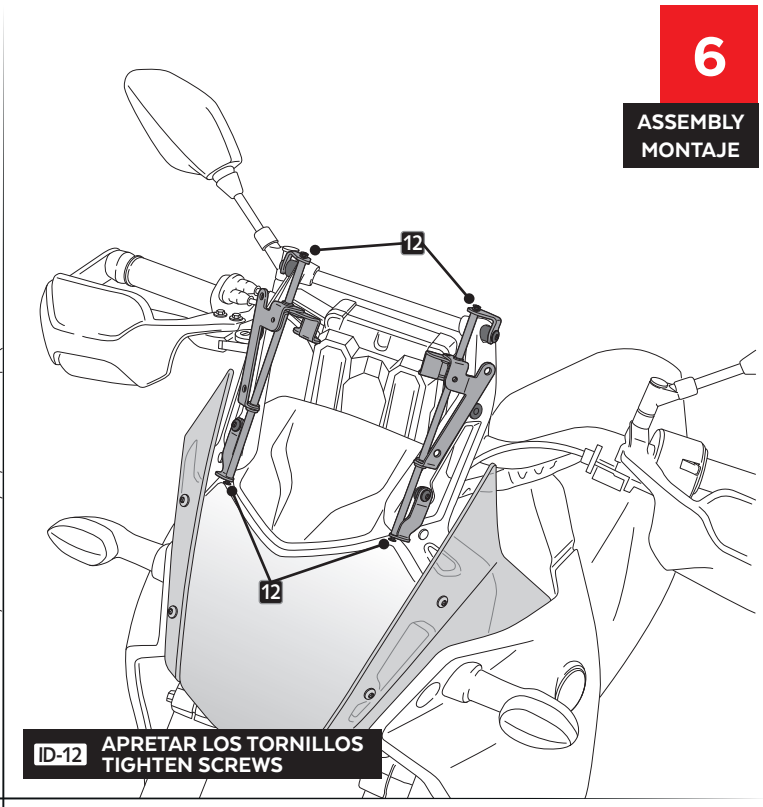

ID-12 APRETAR LOS TORNILLOS
TIGHTEN SCREWS

7
ASSEMBLY
MONTAJE

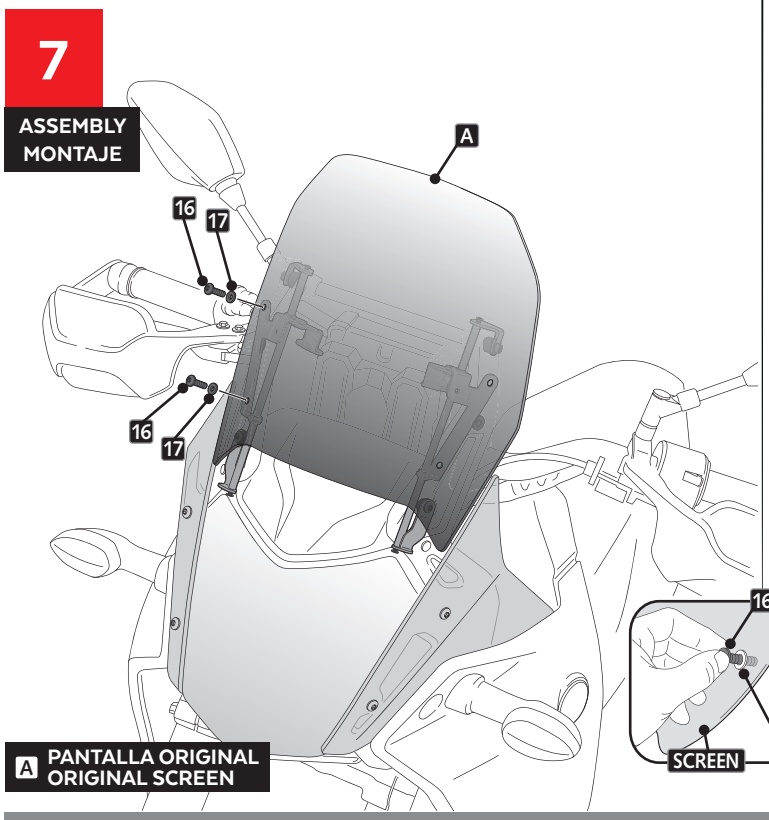

A PANTALLA ORIGINAL
ORIGINAL SCREEN

8
ASSEMBLY
MONTAJE

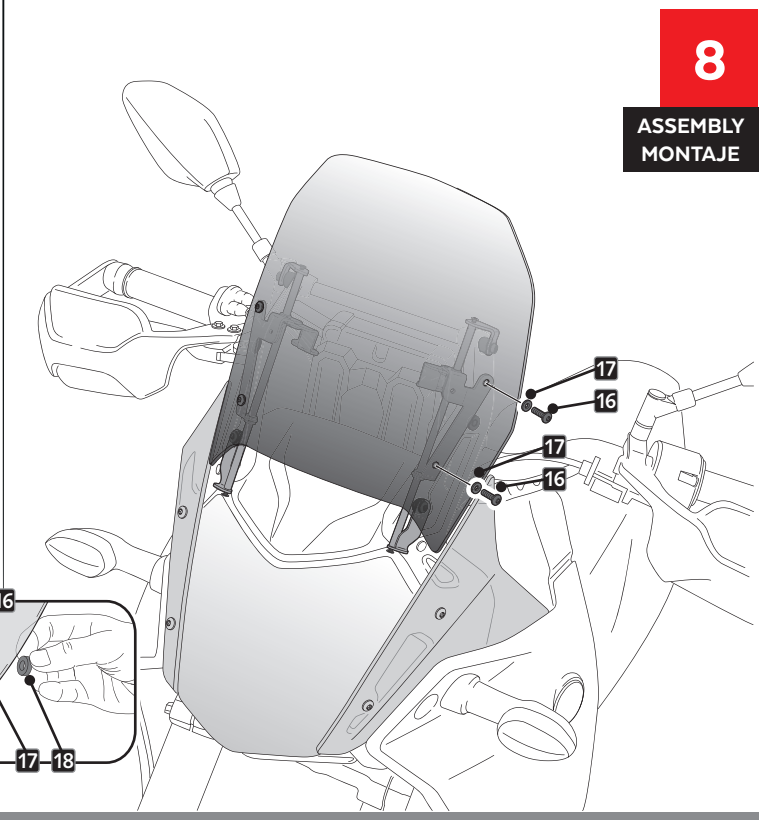

Illustrations and layout by: www.ciandisseny.com

YAMAHA TENERÉ 700 '19-

EXPLOTING

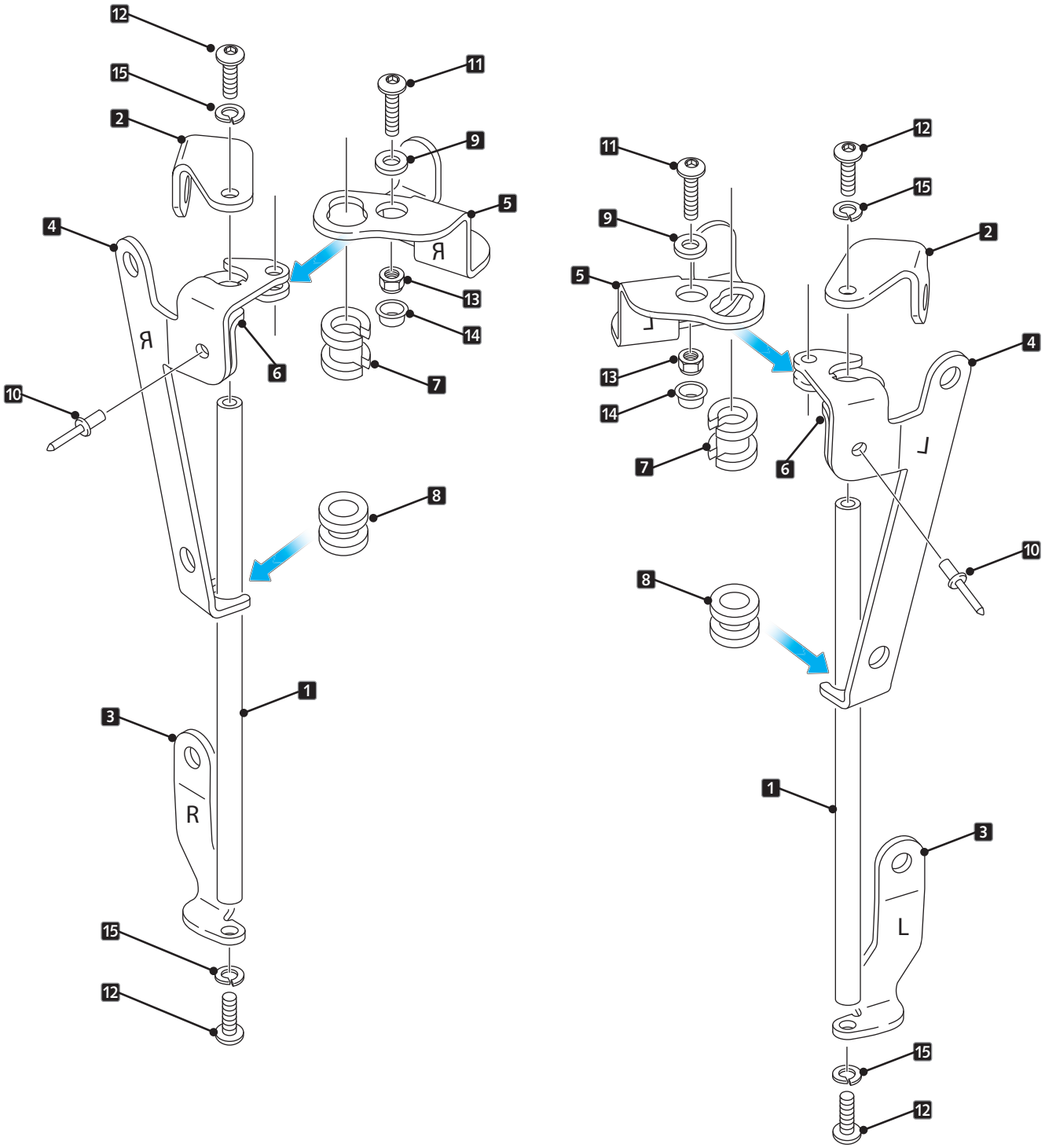

Illustrations and layout by: www.ciandisseny.com